GREENFIELD MFG CO
9800 BUSTLETON AVE
PHILADELPHIA, PA 19115

REF:
INTERNATIONAL PLUMBING CODE SECTION 305.8
INTERNATIONAL RESIDENTIAL CODE SECTION 602.6.1

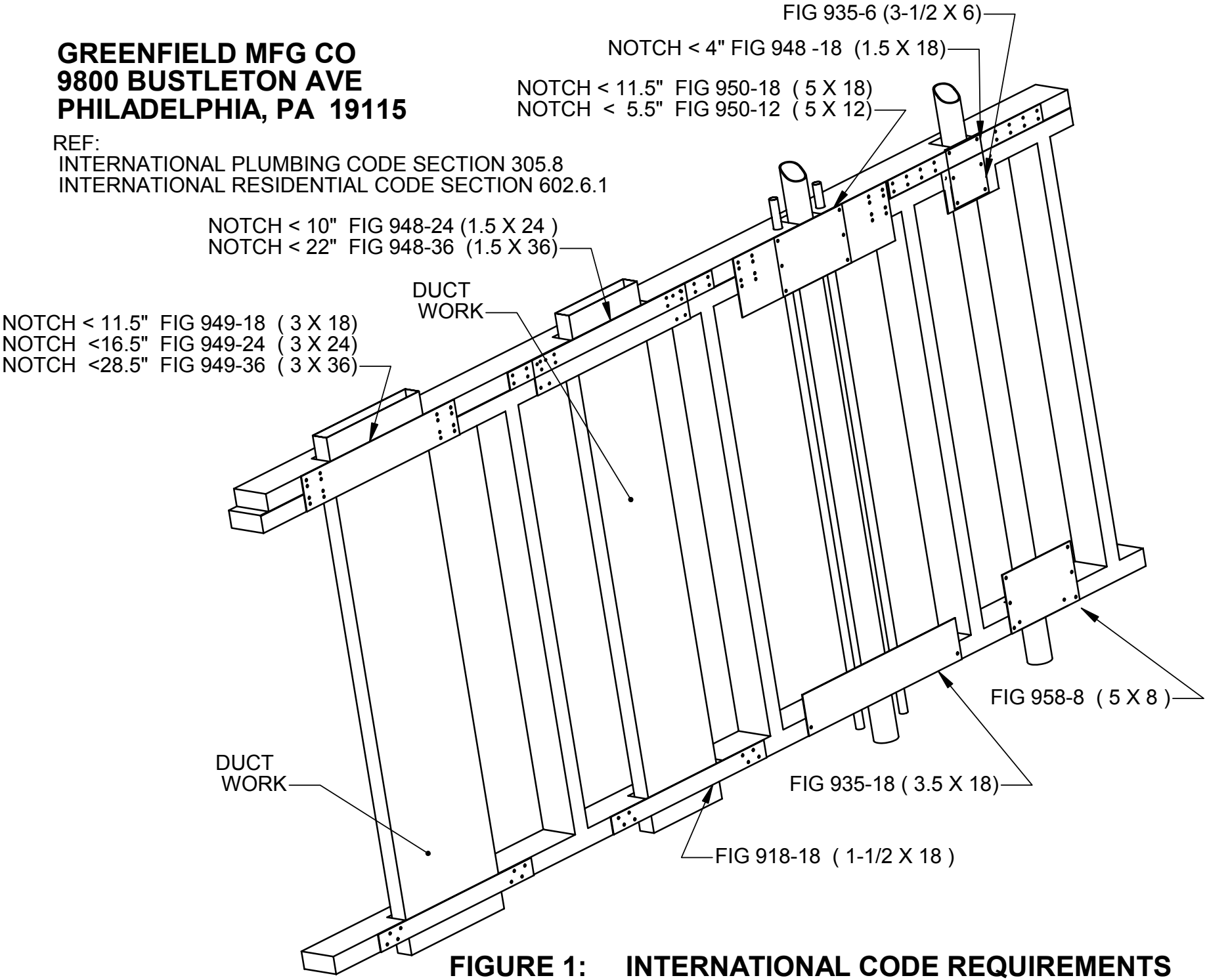

FIGURE 1: INTERNATIONAL CODE REQUIREMENTS